PID CONTROLLER

The *three term* or *PID* controller has the following configuration and equation.

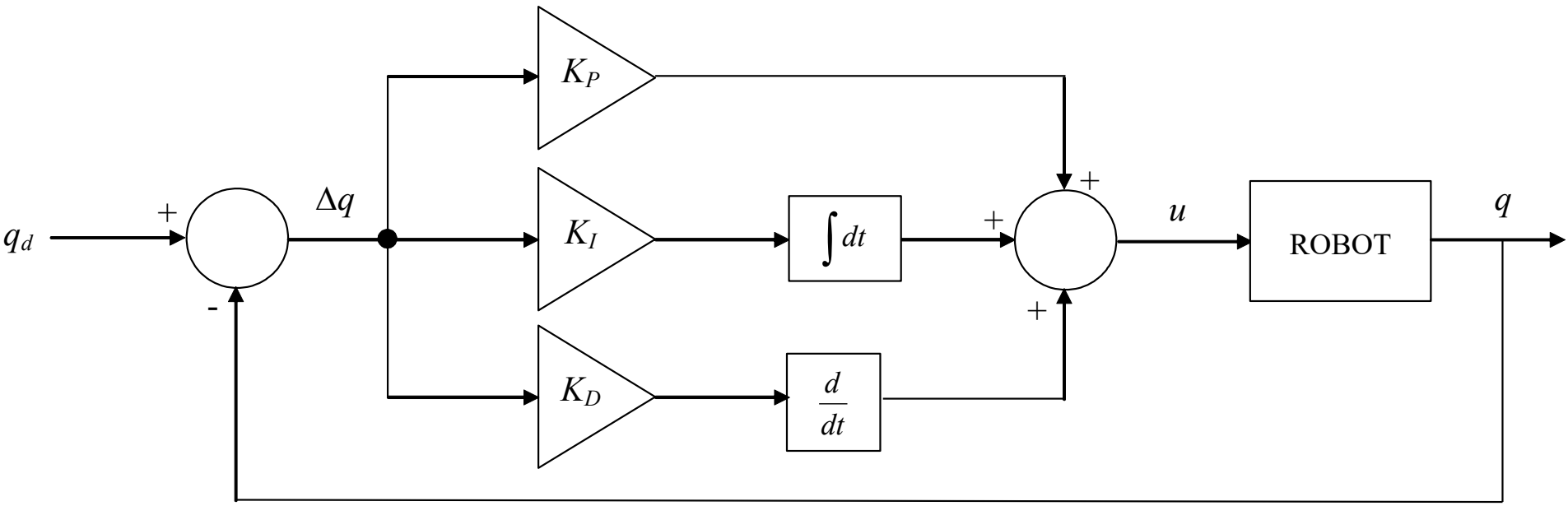

$$u = K_P \Delta q + K_I \int \Delta q dt + K_D \frac{d\Delta q}{dt} = K_P \left(\Delta q + \frac{1}{T_I} \int \Delta q dt + T_D \frac{d\Delta q}{dt} \right)$$

Ziegler-Nichols Tuning

(1) Oscillation Approach

The oscillation approach follows these steps:

(a) Simulate a proportional controller and increase the K_P gain until the response starts to oscillate. This gives K_C.

(b) Calculate the period of the oscillation, T_C.

(c) The recommended gain settings for P, PI and PID controllers are:

P controller:	K_P	=	$0.5\ K_C$
PI controller:	K_P	=	$0.45\ K_C$
	T_I	=	$0.833\ T_C$
PID controller:	K_P	=	$0.6\ K_C$
	T_I	=	$0.5\ T_C$
	T_D	=	$0.125\ T_C$

Ziegler-Nichols Tuning

(2) Open-Loop Step Approach

The open-loop step approach follows these steps:

(a) Generate the open-loop step response.

(b) Calculate the slope R and the lag time L.

(c) The recommended gain settings for P, PI and PID controllers are thus:

P controller:	K_P	=	$1/(RL)$
PI controller:	K_P	=	$0.9/(RL)$
	T_I	=	$3.3\ L$
PID controller:	K_P	=	$1.2/(RL)$
	T_I	=	$2\ L$
	T_D	=	$0.5\ L$

Inverse Dynamics Control

A forward dynamic model behaves in the following way

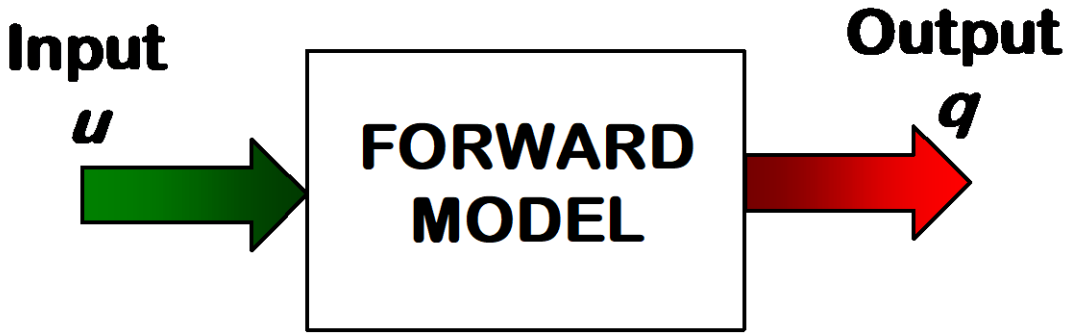

An inverse dynamic model behaves in the following way

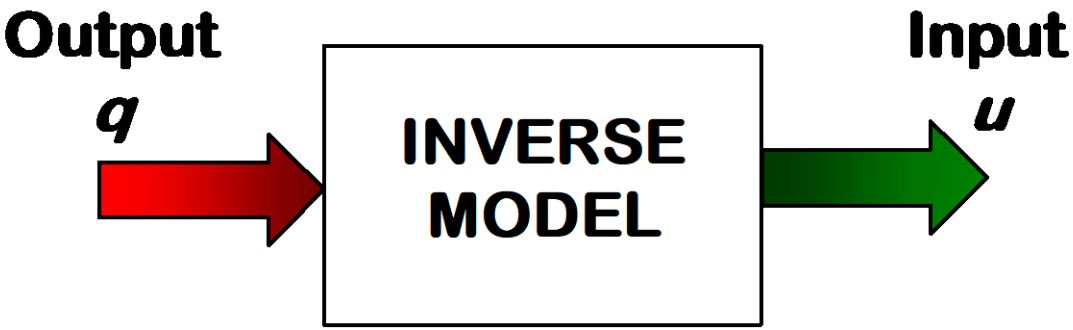

Inverse Dynamic Controller

The *inverse dynamic* controller has the following configuration.

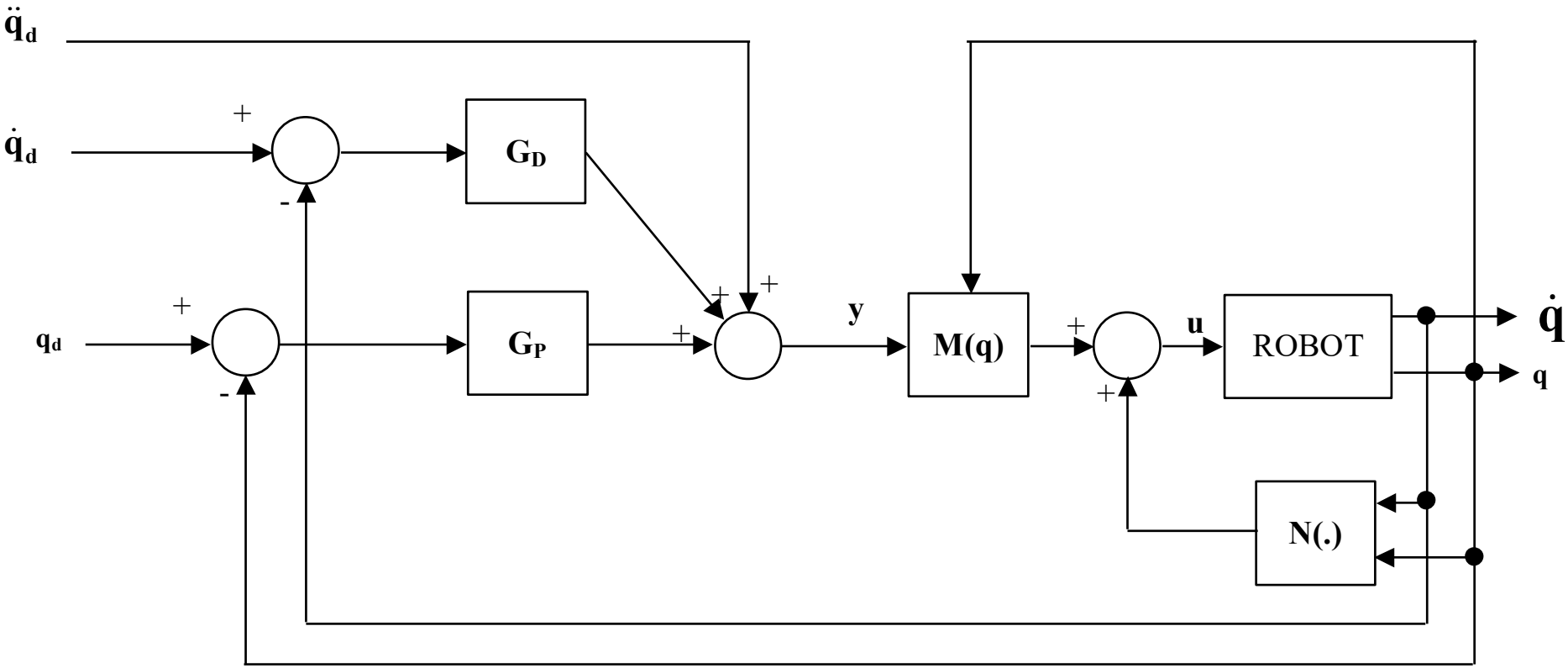

Inverse Dynamic Controller

The controller expression becomes:

$$\mathbf{u} = \mathbf{M}(\mathbf{q})\left(\ddot{\mathbf{q}}_{\mathbf{d}} + \mathbf{G}_{\mathbf{D}}\Delta\dot{\mathbf{q}} + \mathbf{G}_{\mathbf{P}}\Delta\mathbf{q}\right) + \mathbf{N}(\dot{\mathbf{q}}, \mathbf{q})$$

Where

M is the inertia matrix for the robot,

N is the Coriolis and force effects matrix for the robot,

$$\mathbf{G}_{\mathbf{D}} = diag\left\{2\zeta_1\omega_{n1}, 2\zeta_2\omega_{n2}, \cdots, 2\zeta_n\omega_{nm}\right\}$$

$$\mathbf{G}_{\mathbf{P}} = diag\left\{\omega_{n1}{}^2, \omega_{n2}{}^2, \cdots, \omega_{nm}{}^2\right\}$$

Sliding Mode Control

Sliding Mode controller has two parts i.e. the equivalent control and the switching term:

$$u = u_{eq} + u_{sw}$$

These components are described below:

- *Equivalent Controller* is a nominal linear controller (such as PID) which provides a limited range of control effectiveness (due to drawbacks).
- *Switching Controller* is a nonlinear term which provides additional switching action when the controller needs more control effort to perform the desired control task. This nonlinear switching provides the robustness characteristics of this type of control system.

Sliding Mode Control

For a SISO decoupled system the *Equivalent Control* term can be chosen as:

$$u_{eq} = -\mathbf{k}^{\mathbf{T}}\mathbf{x}$$

and the *Switching Control* term is:

$$u_{sw} = \frac{1}{\left(\mathbf{h}^{\mathbf{T}}\mathbf{b}\right)}\left(\mathbf{h}^{\mathbf{T}}\dot{\mathbf{x}}_{\mathbf{d}} - \eta\,\mathrm{sgn}(\sigma)\right)$$

Therefore, the total control expression becomes:

$$u = -\mathbf{k}^{\mathbf{T}}\mathbf{x} + \frac{1}{\left(\mathbf{h}^{\mathbf{T}}\mathbf{b}\right)}\left(\mathbf{h}^{\mathbf{T}}\dot{\mathbf{x}}_{\mathbf{d}} - \eta\,\mathrm{sgn}(\sigma)\right)$$